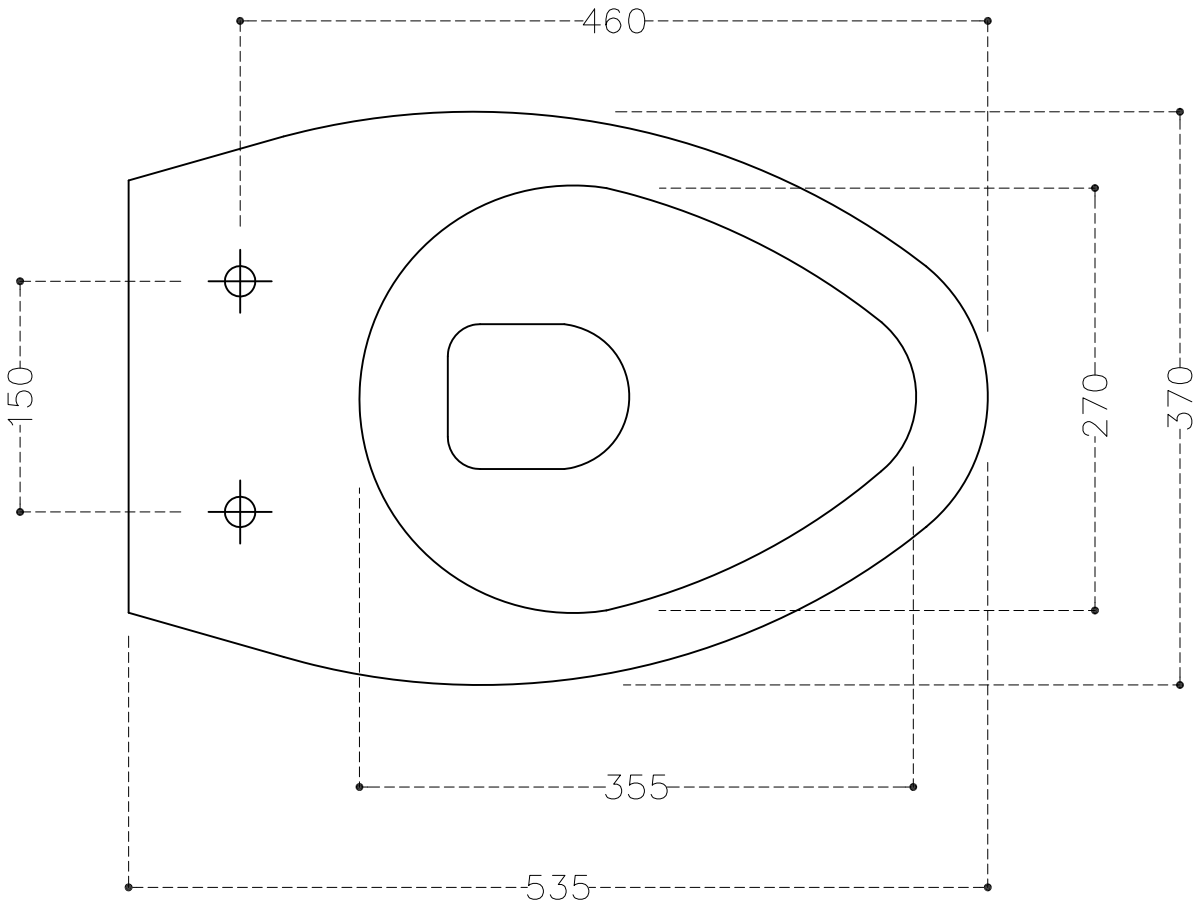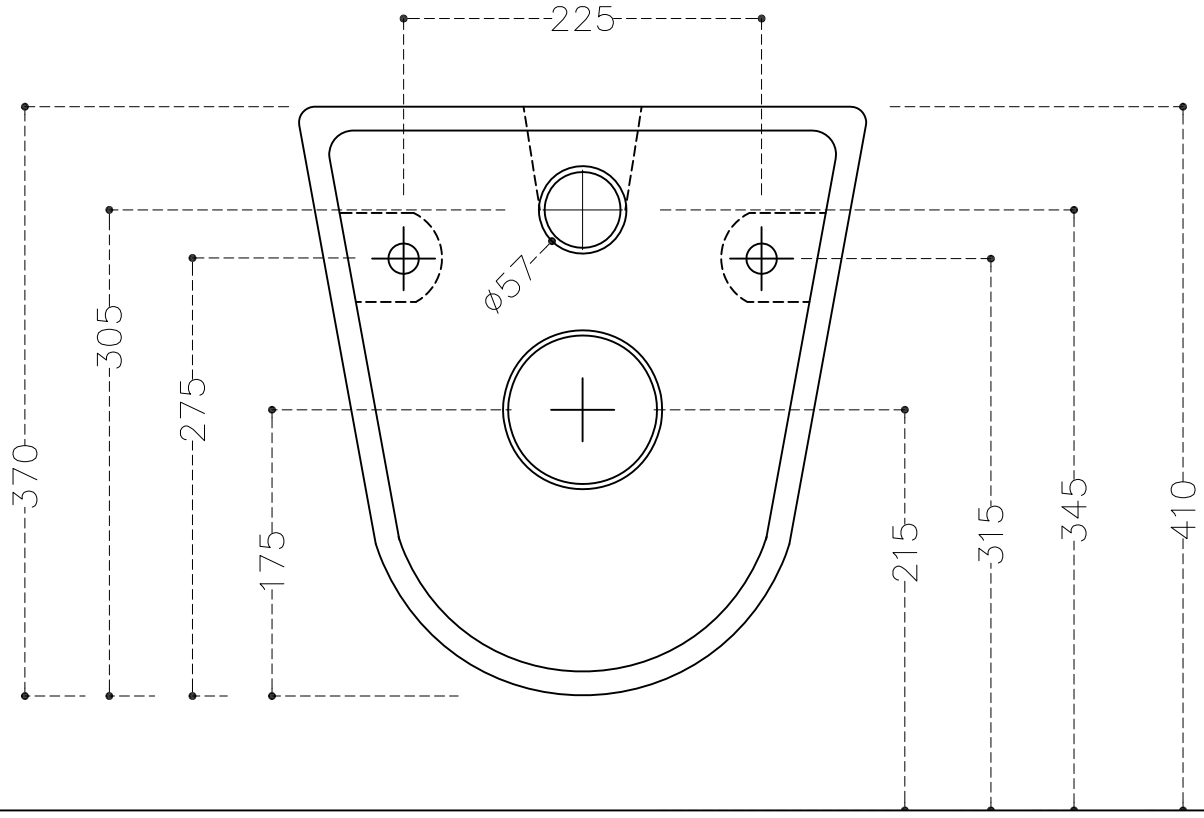CNS-WHT-WS01